CLIFF

ISS	AMEND	DATE
1	1st DRAWN	11/6/96
2	CP3195 ADDED	5/8/98
3	CP3194 ADDED	15/10/98

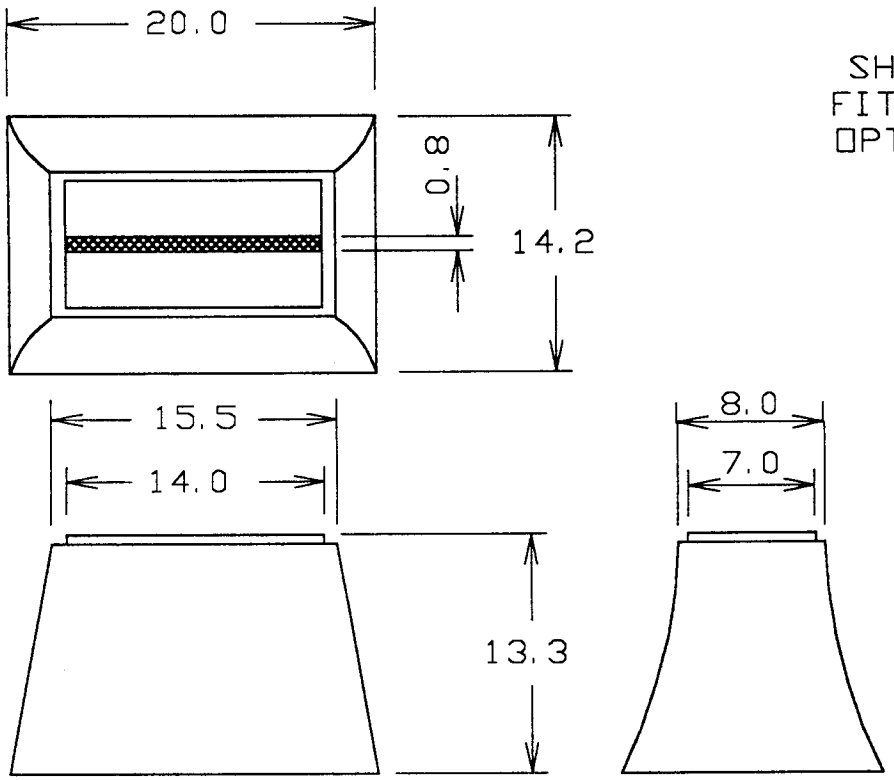

SHAFT FITTING OPTIONS

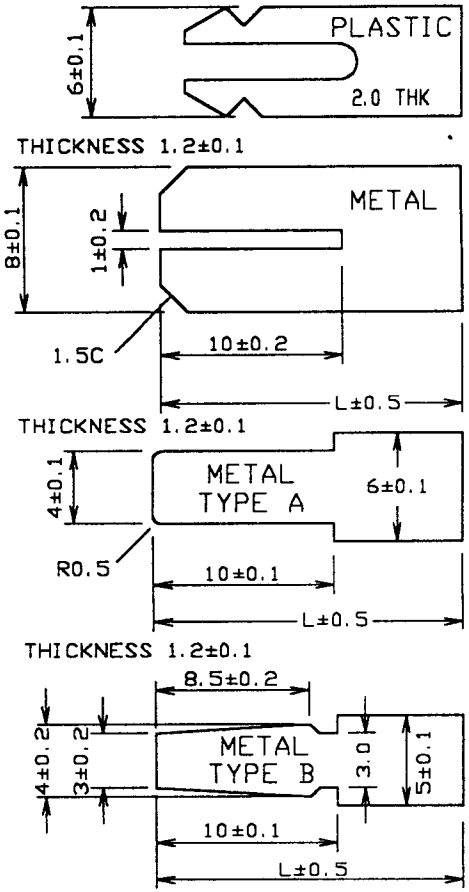

VARIANTS

P/No.	MODEL	ML COL
CP 3190	CS/2 BLK	WHITE
CP 3191	CS/2 BLK 8/4	WHITE
CP 3192	CS/2 BLK ALPS	WHITE
CP 3193	CS/2B BLK	WHITE
CP 3194	CS/2B BLK ML	RED
CP 3195	CS/2B RED ML	WHITE
CP 3250	CS/2A BLK	WHITE

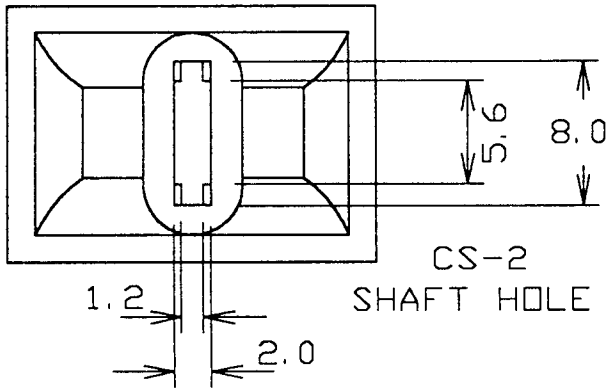

CS-2 SHAFT HOLE

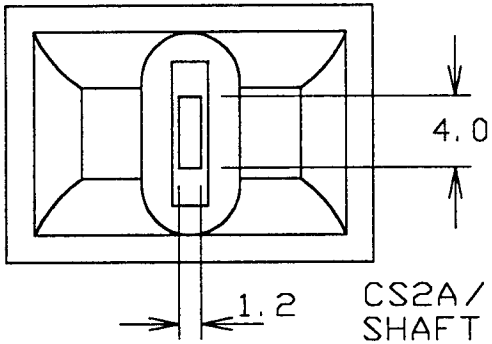

CS2A/CS2B SHAFT HOLE

Tolerance

NO DEC. PLACE ± 0.50
1 DEC. PLACE ± 0.20
2 DEC. PLACE ± 0.10
DIA. HOLES ± 0.10
ANGLES ± 1/2°
UNLESS OTHERWISE STATED

WHERE USED F.R.

SCALE N.T.S.

DIMENSIONS IN MILLIMETERS UNLESS OTHERWISE STATED. WORK TO DIMENSIONS. DO NOT SCALE DRAWING. 3rd ANGLE PROJECTION. REMOVE BURRS. IF IN DOUBT ASK.

Cliff Electronic Components, Inc.
4876 East Second Street, Benicia, CA 94510 USA
Tel: (707) 746 8090 Fax: (707) 746 8092

MATERIAL POLYAMIDE A28GM
FINISH AS MOULDED
DRAWN C.A.M.J. APPD. RWT

TITLE SLIDER POT KNOB CS/2, CS/2A, CS/2B

DRWG. No. CP 3190

FORM: A4DRWGH